Data Sheet:	MTX BS - Hydrator

januar 11, 2021

Pictures:	  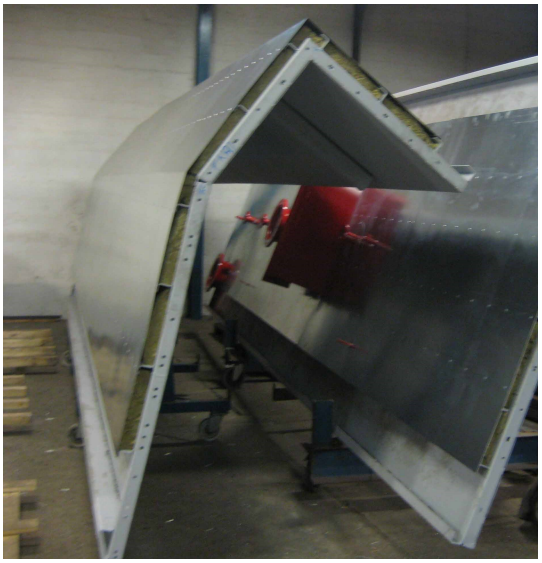
Machine number:	1071-003D (18 m^3), 1071-005D (22 m^3), 1071-006D (30 m^3), 1073-002D (42 m^3), 1073-001D (50 m^3)
Machine paint	Standard ISO 12944-5 category C2. Machines, guards etc. comes in a color type RAL 3001 red suitable for indoor, non corrosive environment - water and oil resistant -15 to + 60 degrees C, surface purified with alkaline degreaser, painted with a machine primer and here after coating paint.
Custom tariff number:	84369900
Standard:	DS/EN 60204-1:2006 Safety of Machinery - Electrical Equipment of Machines, DS/EN ISO 13850 of January 29th 2007 emergency stop, DS/EN ISO 13849-1 safety-related parts of control systems, DS/EN 60204-1: 2006, cable installation method E

Materials:	- 2x Ø600 or 800 mm Auger blades are made of 15 mm Hardox material with a strong pipe as core material - Lover 1200 mm of the machine is made of 10 mm steel plating and covered with another 5 mm stainless steel plate. - Top cover is made of 3 mm reinforced steel plating. Reinforcement is made with 50x100x5 mm bended angle bars, welded with a distance of 300 mm, to hold insulation material in between. - All top housing of the machine is fully coated with stainless steel AISI 305, with cleaned welding and fully welded. - All connections are prepared for full welding from the inside of the machines after mounting the machine on sight.
Machine function:	The Cormall Hydrator is used to prepare straw for the production of Bio ethanol or Biogas and fulfills the functions: 1. Buffer silo, - to have reaction time in the down stream process line. 2. Soaking straw by mixing with water. 3. Heating straw by: a. Reusing process steam from process line or steam from boiler. b. Using hot water with heat exchange in bottom part of machine as heating element. 4. Feeding in continuous flow to particle pump or conveyer systems, or working as a batch process. 5. Weighing flow going into process and registering consumption. The material is filled into the rear of the machine and transported to the top by the two augers inside. At the top is the material either taken out or reversed to the back of the machine by the molehill in the top. 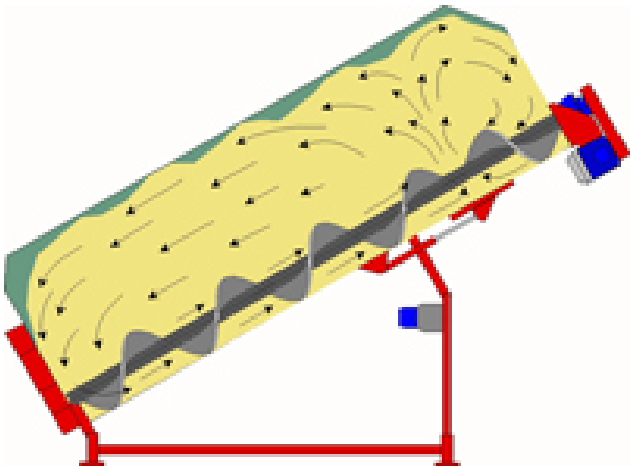

Function of the weight control and refill:	The components standard delivered and used for this is: 1. 4 load cells (Digistar) 2. Junction box for connecting the load cells 3. Weight computer with analogue output signal 4-20 mA. (Digistar EZ 2400) All parts must be connected accordingly to the manual for the weight detection. Correct connection and programming will ensure that the feeding stops when the max level is reached, say 3000 kg, and start again when the load comes under min. level kg.
Function mixer augers:	The mixer augers are made as a twin system, thus ensuring that in case of one of the augers failure it is than still possible to get material out of the machine with the other auger. Both augers are pulled by individual electric motor that through a V-Belt pulls the planetary gear and the gear is activating the auger with a clutch connection. The gear transmission is delivered with: 1. RPM sensor on auger drive 1 2. RPM sensor on auger drive 2 WARNING! If the motor is working but the signal from the RPM sensor is not detected, than this can happen be course the V-belt is slipping. Such situation bust stop machine and give alarm.
Function reversing the direction of the Augers:	If for some reason there is a blocking of the augers, then it is possible to have reversing of the augers. WARNING! The augers should never reverse longer than 2 sec. and here after they must work forward before reversing is repeated!
Water sprinkler supply:	The machine is performed with 2x 4 sprayer nozzles, 90 degree spread, ½” for 24 l/min per spraying nozzle at 3 bar pressure. (PNR 2235-B).
Steam valve supply	The machine is delivered with 6 inlet placements of stem, that can be closed in pairs with 3 steam valves DN65, PN16

Function of the Knife gates:	The gates are delivered with: 1. Knife gate actuated by hydraulic cylinder 2. Hydraulic pump and valves. a. Hydraulic pump 0,75 kW b. Valve open shutter 24VDC c. Valve closing Shutter 24 VDC 3. Micro switch for closed I/O 4. Micro switch for open I/O The micro switch (3) tells when the knife gate is closed, for this you activate pump (2a) and valve (2c). The micro switch (4) tells when the knife gate is full open, for this you activate pump (2a) and valve (2b) WARNING! There must be a time limit for how long the pump may work without signal from one of the micro switches, if the knife gate for some reason is blocked or fails to work correct, then will the pump be damaged if it continues to operate.
Function of the discharge system on the hydrator:	The machine is delivered with: 1. Discharge shutter with large opening. 2. Hydraulic pump and valves. d. Hydraulic pump 0,75 kW e. Valve open shutter 24VDC f. Valve Closing Shutter 24 VDC 3. Contra valves and nozzles for holding cylinder position on the shutter 4. Rod/wire sensor for measuring opening level of the shutter. Siko SG20-0086 2000-MW1-E1-T1, signal is 4-20 mA. 5. Two augers prepared for individual speed control. The sensor makes it possible to have the exact same opening every time when the hydraulics are opening the shutter The variation in speed of auger can contribute to a more exact discharge set at a certain speed that has proven to give the best and most smooth flow, with a variation in speed connected/linked to the weight measurement from a weighing conveyer that the material is fed on or similar. WARNING PUMP! The pump may only be working when shutter is either opening or closing, failure to comply with this will course the hydraulic oil to overheat.

Inspection agenda:	The machine need to be checked once a week for grease in the grease packing on the main bearing augers, this can also be made with automatic and central grease lubrication. Oil on the main gears should be checked every month. Lubrication of chains that pulls the bridge breaker in front of the machine should be lubricated monthly. Every 4 month should the machine be inspected internal for wear and tear, and exchange plans should be made accordingly to development of the wear inside the machine.
Risk category EN/ISO 13849-1:	PLr: a

Data Sheet:	MTX BS - Hydrator

januar 11, 2021

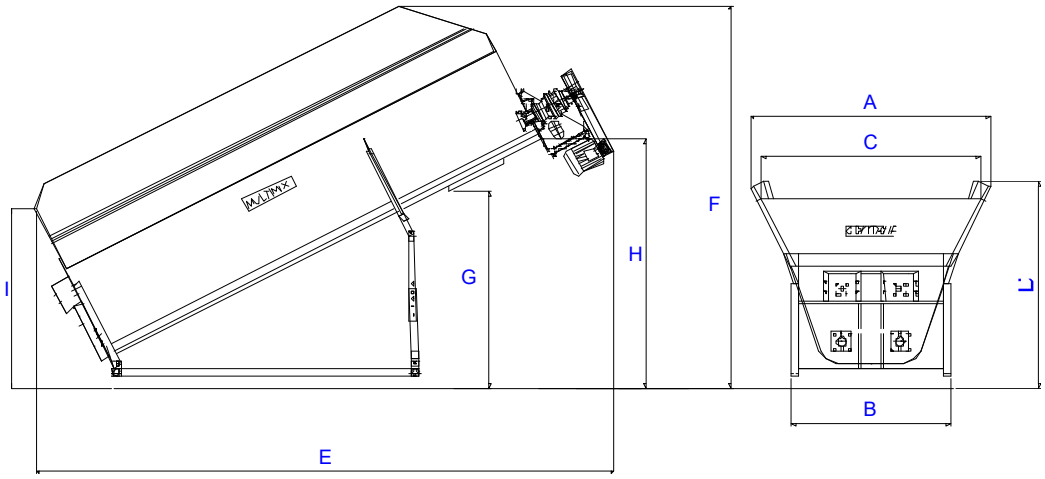

Dimensions:

Mixes	18 m³	22 m³	30 m³	42 m³	50 m³
A	2900	2900	3100	3800	3800
B#	2400	2400	2600	3190	3190
C	2450	2450	2640	3380	3380
D	2550	2550	3040	3290	3290
E	6000	6900	7800	8000	8500
F	4550	5100	5650	5990	6200
G	2050	2300	3030	3030	3500
H	2550	3000	3640	3640	4150
I	2050	2050	2150	2150	2150
weight kg	6800	7900	8900	11200	14100
plate mm	10	10	10	10	10
Shutter mm.	400	900	900	900	900
Auger size					
Mm	15	15	15	15	15
Ø	600	600	600	800	800
rpm/min	25	25	25	17,5	17,5
Motor					
kW 2x	15	15	18,5	22	22
RPM min^{-1}	1400	1400	1400	1400	1400
Starter	Y/D	Y/D	Y/D	Y/D	Y/D
Wire mm²	7x2,5	7x2,5	7x2,5	7x4	7x4
kW pump	0,75	0,75	0,75	0,75	0,75
Starter	DOL	DOL	DOL	DOL	DOL
Wire mm²	4x1	4x1	4x1	4x1	4x1
kW Valve 2x	0,1	0,1	0,1	0,1	0,1
Starter	DOL	DOL	DOL	DOL	DOL
Wire	4x0,75	4x0,75	4x0,75	4x0,75	4x0,75

#) incl. Weight